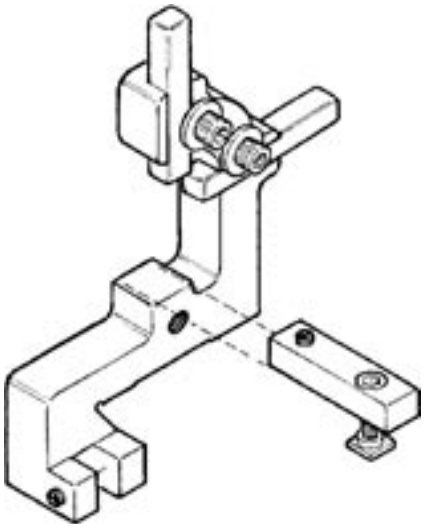

SHERLINE PRODUCTS

INCORPORATED 1974

FOLLOWER REST

P/N 1090

THE PURPOSE OF A FOLLOWER REST

The reason this tool is called a "follower" is because the brass supports actually move along with or "follow" the cutter. It is used to support a piece of round stock while it is still being machined to keep the part from deflecting away from the tool. In a normal setup, the Sherline follower rest will lead the tool. (See Figures 1 and 4.)

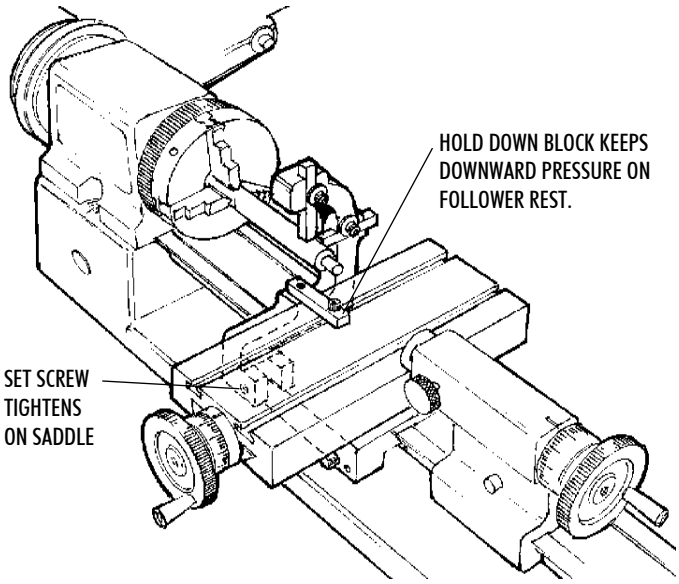

FIGURE 1—Follower rest installed on lathe. (Tool post removed for clarity.)

A follower rest works because it counters the two main forces applied by the tool. When a tool is cutting, the stock wants to climb up on the tool as well as be pushed away. The top brass pad will keep the stock from climbing up, and the brass pad in the rear will keep the stock from being pushed away. The stock will then be cut concentric with the outside diameter because that is where it is supported. It isn't necessary to have the free end of the stock supported by a center when using a follower, but it does make for a better setup, especially for larger diameters.

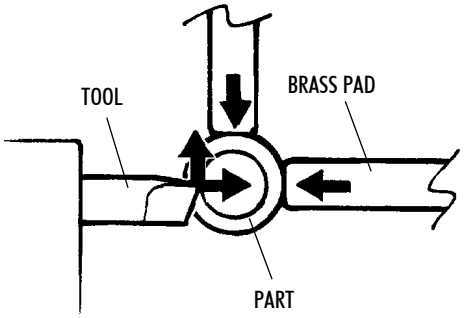

FIGURE 2—Cutting forces on a part and how they are countered by the follower rest supports.

When using a center to support the free end, newer Sherline lathes manufactured after mid-1996 have a cutout in the tailstock to allow it to overlap the table. Older machines may require the use of a tailstock spindle extension (P/N 1220) for clearance. If you are using a tailstock center, the pads should be set by moving the rest as close to the tailstock as possible, tightening and returning to cutting position.

MOUNTING THE FOLLOWER REST TO THE SADDLE

The Sherline follower rest attaches to the lathe saddle with a flat ended set screw. Push down on the follower rest as you tighten this screw so it is clamped flat on the bed. The small block which mounts by means of the crosslide T-slot is positioned so that the nylon tip set screw pushes down on the machined top surface of the body of the follower rest.

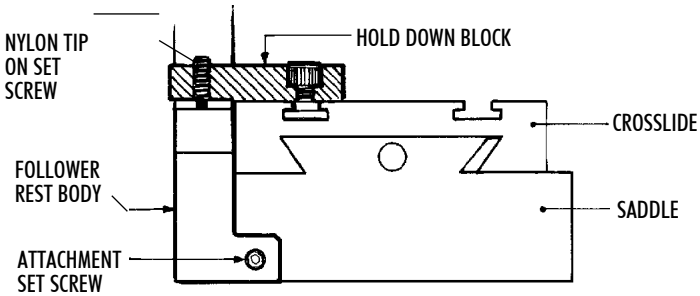

FIGURE 3—Follower hold down block in position.

SHERLINE PRODUCTS INC. · 3235 Executive Ridge · Vista · California 92081-8527 · FAX: (760) 727-7857
Toll Free Order Line: (800) 541-0735 · International/Local/Tech. Assistance: (760) 727-5857 · Internet: www.sherline.com

12/22/11

This screw holds down the follower rest to counter lifting forces, and its nylon face can also slide on the flat surface so the crosslide can be moved.

In actual use, the tool post should be positioned so only a very small adjustment of the crosslide is required to get the part to finished size.

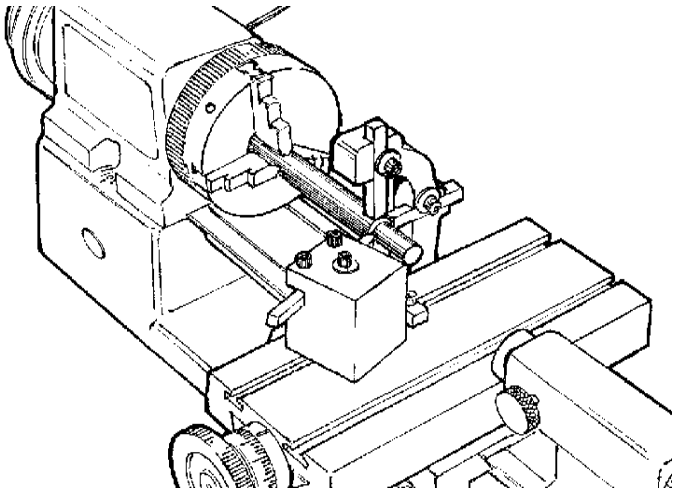

FIGURE 4—Follower rest set up in normal position with pads leading the cutting tool.

SETTING THE POSITION OF THE SUPPORT PADS

To set the pad position, put the round piece you plan to machine in the collet or chuck you will be using. Turn the spindle by hand to make sure the part runs reasonably true. Move the saddle (with the follower rest attached) close to the spindle. Loosen the pad clamping screws, bring the brass pads in contact with the part and retighten the screws to lock them in place. Then move the follower rest back to the position required for the cut and the pads will be aligned with the headstock end of the stock. If you are dealing with very small diameter part, it may be necessary to modify the pad to assure contact. (See Figure 5.)

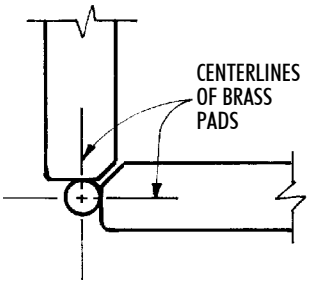

FIGURE 5—Remove the corners of the pad tips to allow them to come closer together for small parts.

With a small diameter rod held in the a chuck or collet, transfer the center of the part to the side of each pad using a scribe. Because of “tolerance buildup”, the line may not fall on the exact center of the pad, but that will not effect the function of the follower.

TIPS FOR USING THE FOLLOWER REST

The round stock you use with this attachment should be very round and have a good finish. If the stock is not round, the finished part will have the same shape because the part rotates supported by its outside diameter. A poor surface finish on the part will cause excessive wear on the pads. This in turn can cause your part to taper. To minimize wear, always lubricate the pads with oil when cutting. It would be wise to set up with a piece of scrap of the same material and diameter as your actual stock.

When using a follower of this type, you will usually cut to the finished diameter in one pass. If you need a close tolerance part, it may be easier to turn it slightly oversize, bring it to size with a good, flat mill file and polish it with 320 grit wet/dry paper. If you have a lot of pieces to make, it pays to spend a little extra time getting the setup just right.

MAKING THE CUT

Run the follower rest down the part until the pads are near the end and the tool is just off the end. Dial in the desired depth of cut. If the end of the part is not supported by a center, the part may tend to spring away from the pads a little when not being pressed on by the tool. If the part isn't running perfectly true, it could cause a problem at the start of the cut because the part isn’t in constant contact with the brass pads. If this is the case, slip a loop of paper around the part and pull back lightly until the part rests against the pads. Now run the lathe at about 200 RPM and keep the part in position with the paper loop until you begin cutting. If you don't do this, it could cause a problem if the cutter starts to cut and the end of the stock is bouncing around because it isn't running straight or is bent. Take a heavy enough cut to keep the stock firmly against the pads but still larger than the final dimension. Cut about 1/8" (4mm) of length, stop and measure the amount of error and then adjust the crosslide accordingly. (The tool will move but the follower will not.) If the diameter is correct, cut the distance required. By cutting only 1/8" the pads are still supporting the part if you take another cut.

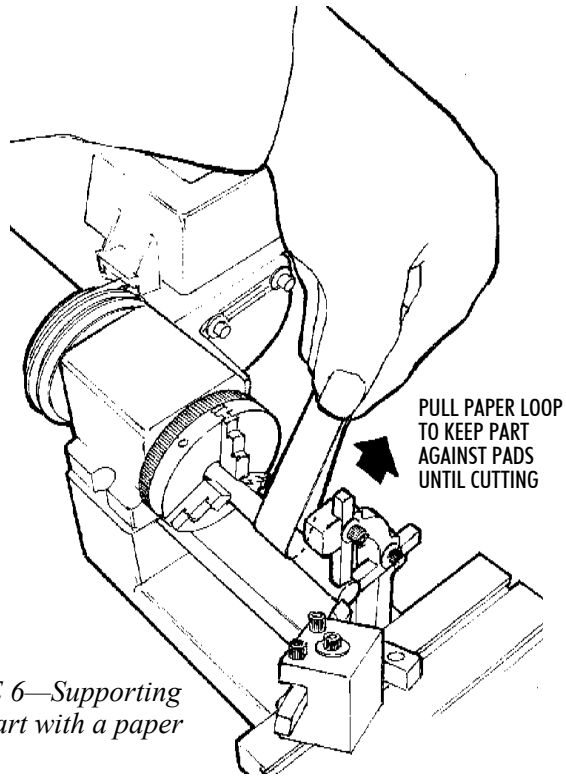

FIGURE 6—Supporting a long part with a paper loop.

The part size may vary as the pads seat in. Remember to keep them oiled. Keep the RPM down and the feed rate up. A slight radius on the tool tip will improve the finish. When you stop cutting you may have to hold the stock against the pads to prevent "undercutting" as pressure from the tool is released.

TURNING STOCK OTHER THAN ROUND

If you need to turn a round end on material that isn't round (like hex or square stock), the tool must lead the pads so that the pads are running on the round surface cut by the tool. The tool can be mounted almost parallel with the bed to accomplish this. (See Figure 7.) Take your initial (starting) cut with the end of the part held close to the chuck for support. Then move it out into position where the follower rest pads are supporting the newly machined round surface of the part and cut to size.

I have found it best to always start with a piece of scrap material identical to your final part for experimentation with the setup. This accessory is not hard to use, but you really need to turn a practice part first to get your speed and feed rates correct.

Joe Martin, President and Owner
SHERLINE Products

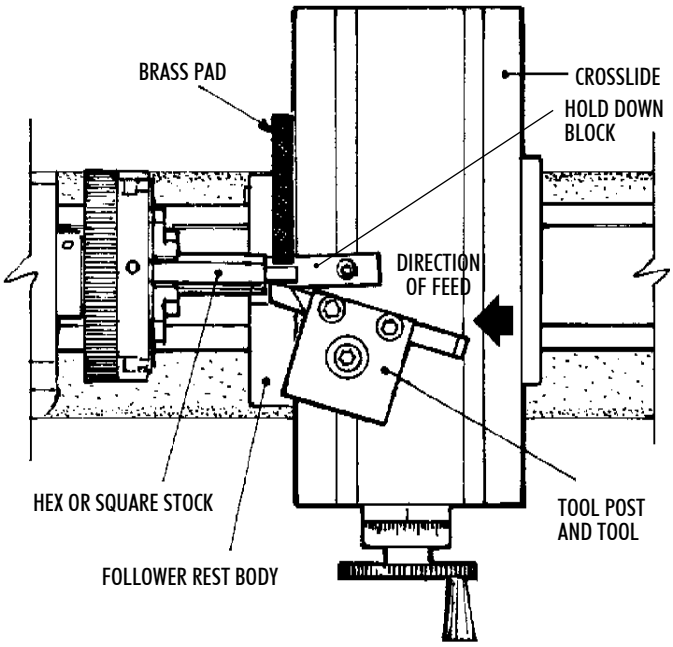

FIGURE 7—Cutting non-round stock.

EXPLODED VIEW PARTS DIAGRAM

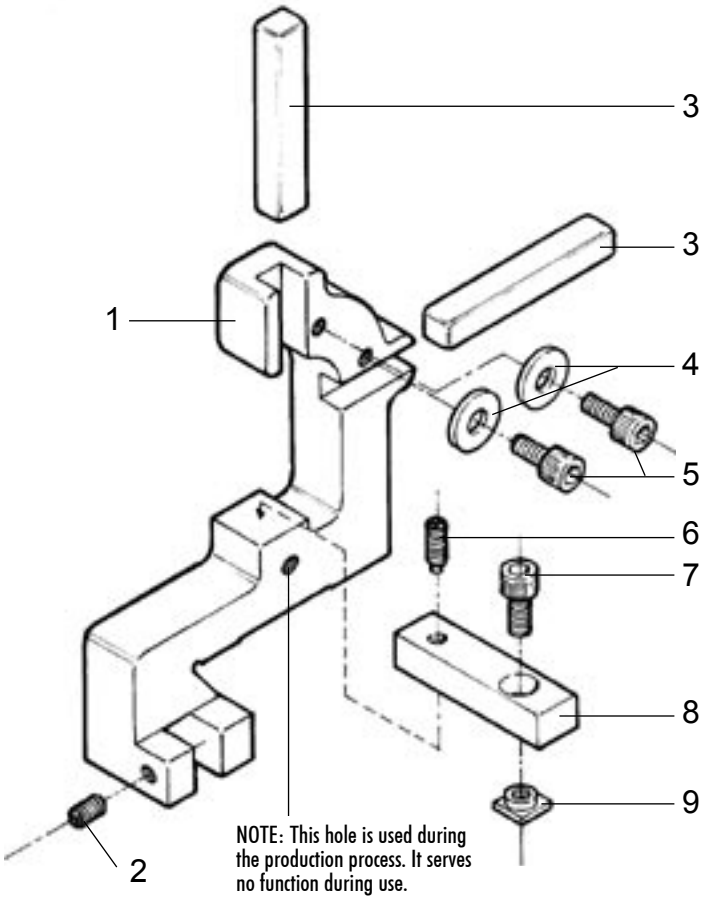

FOLLOWER REST PARTS LIST

REF. NO.	PART NO.	DESCRIPTION
1	10870	Follower rest body
2	40600	Flat Point set screw, 10-32 x 1/4"
3	10880	Brass pad (2)
4	40660	#10 Flat washer (2)
5	40510	Skt. hd. cap screw, 10-32 x 3/8" (2)
6	10940	Set Screw w/ nylon head, 10-32 x 3/8"
7	40770	Skt. hd. cap screw, 10-32 x 5/16"
8	10890	Follower hold down block
9	30560	Tee nut, 10-32 (Replacements available as set of 4)